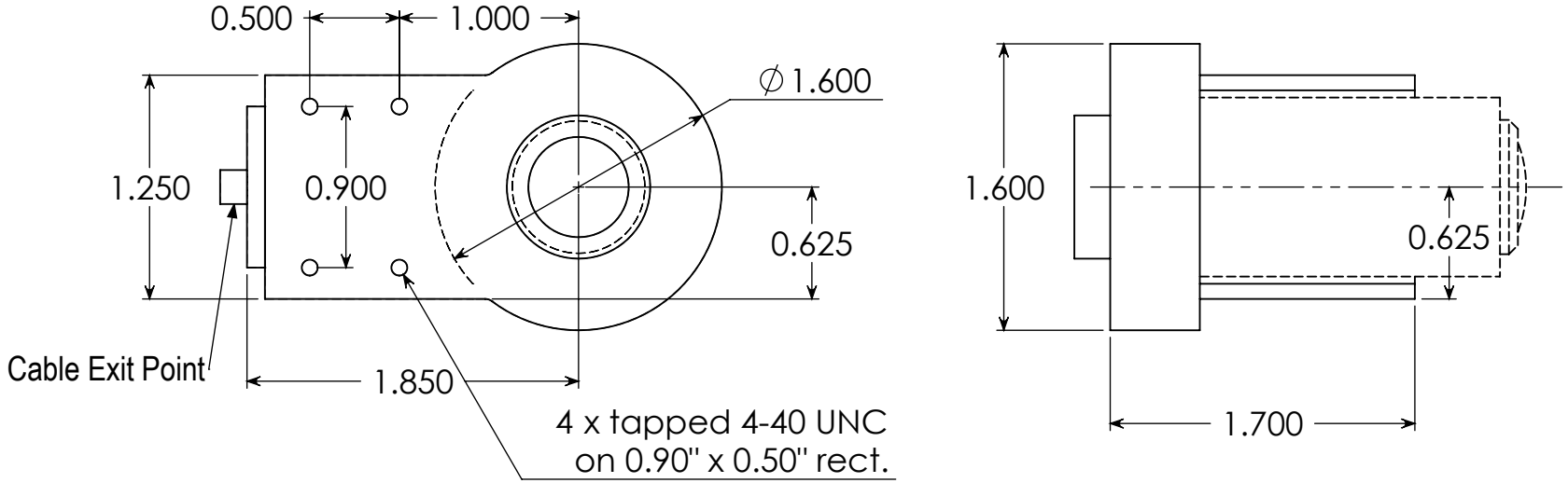

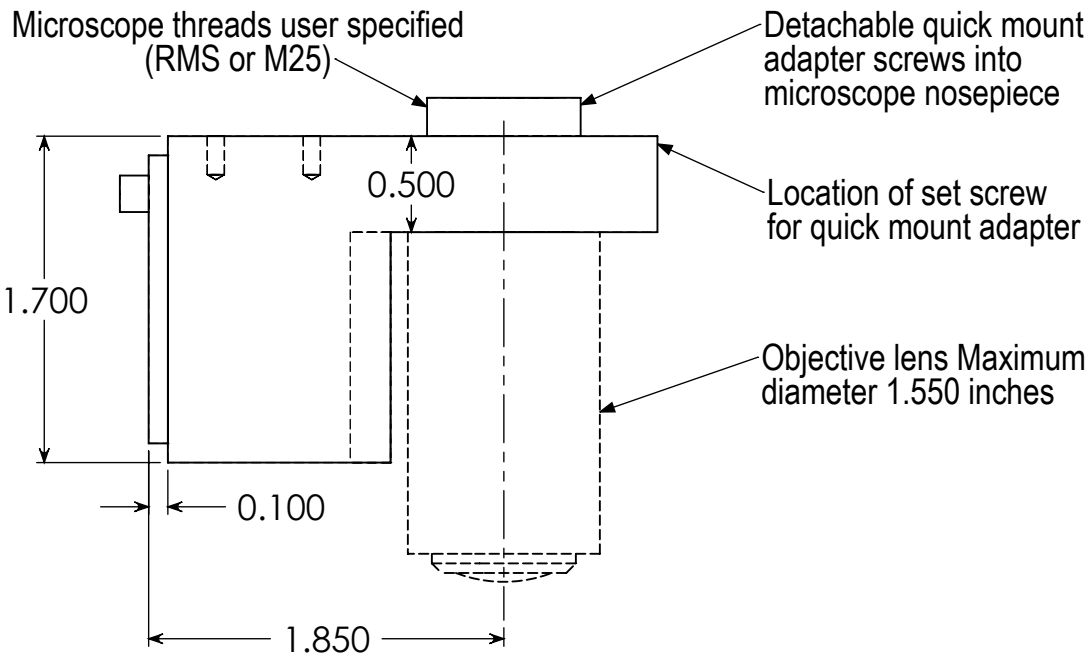

MAD CITY LABS INC.

Nano-F100

Dimensions are in INCHES

Drawing No.
NF1001.09.A

DRAWING IS TO BE USED AS A GUIDE ONLY. DIMENSIONS ARE SUBJECT TO CHANGE WITHOUT NOTICE. THE INFORMATION CONTAINED IN THIS DRAWING IS THE SOLE PROPERTY OF MAD CITY LABS. ANY REPRODUCTION IN PART OR AS A WHOLE IS PROHIBITED.

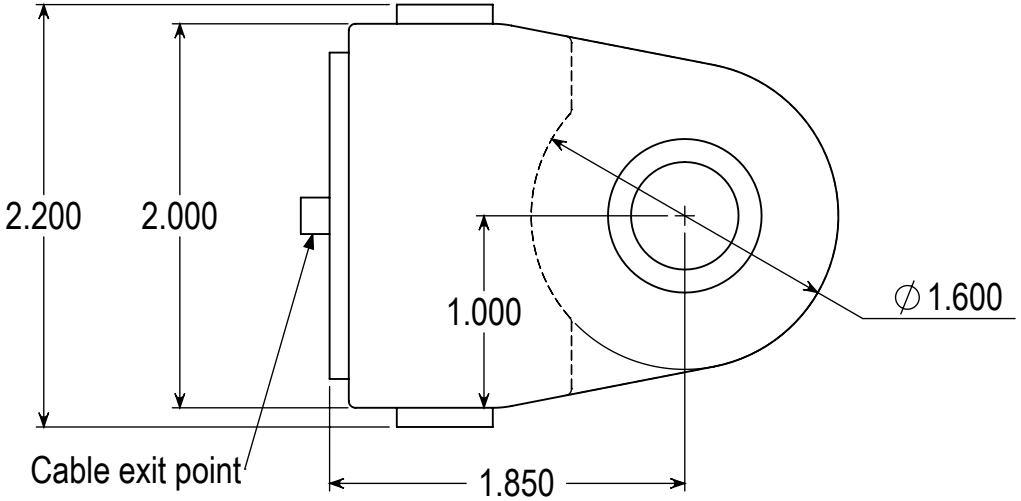

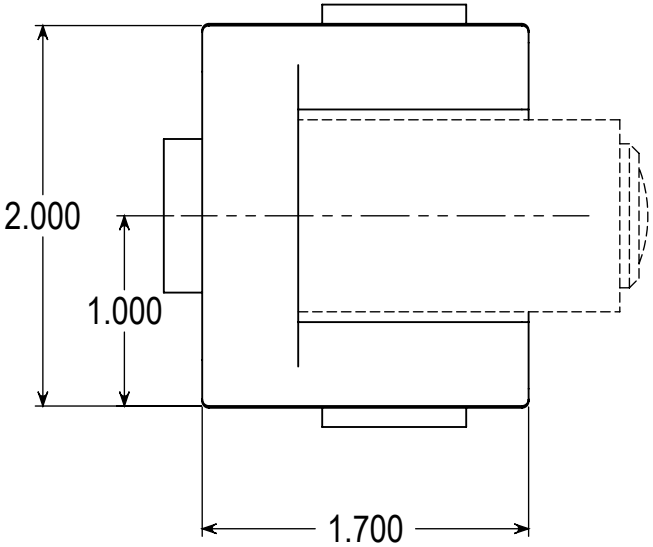

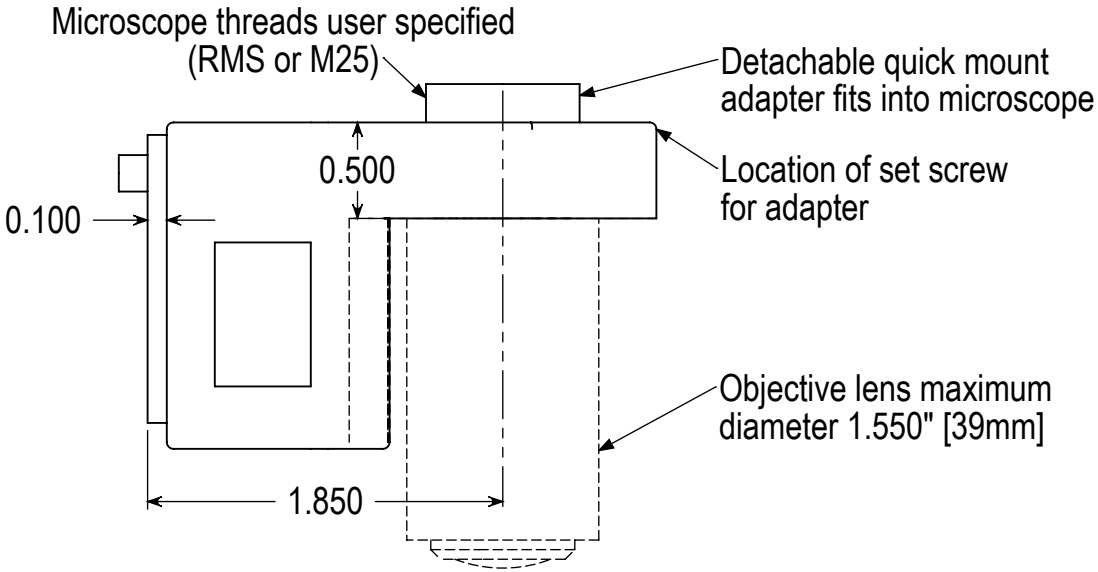

MAD CITY LABS INC.

Nano-F200

Dimensions are in INCHES

Drawing No.
NF2001.10.A

DRAWING IS TO BE USED AS A GUIDE ONLY. DIMENSIONS ARE SUBJECT TO CHANGE WITHOUT NOTICE. THE INFORMATION CONTAINED IN THIS DRAWING IS THE SOLE PROPERTY OF MAD CITY LABS. ANY REPRODUCTION IN PART OR AS A WHOLE IS PROHIBITED.

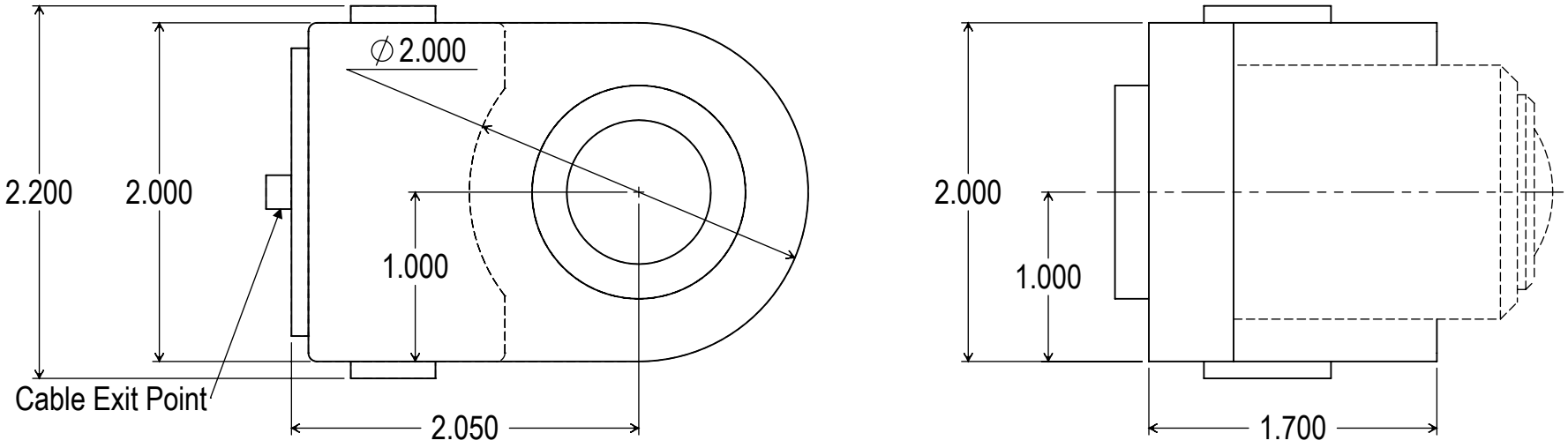

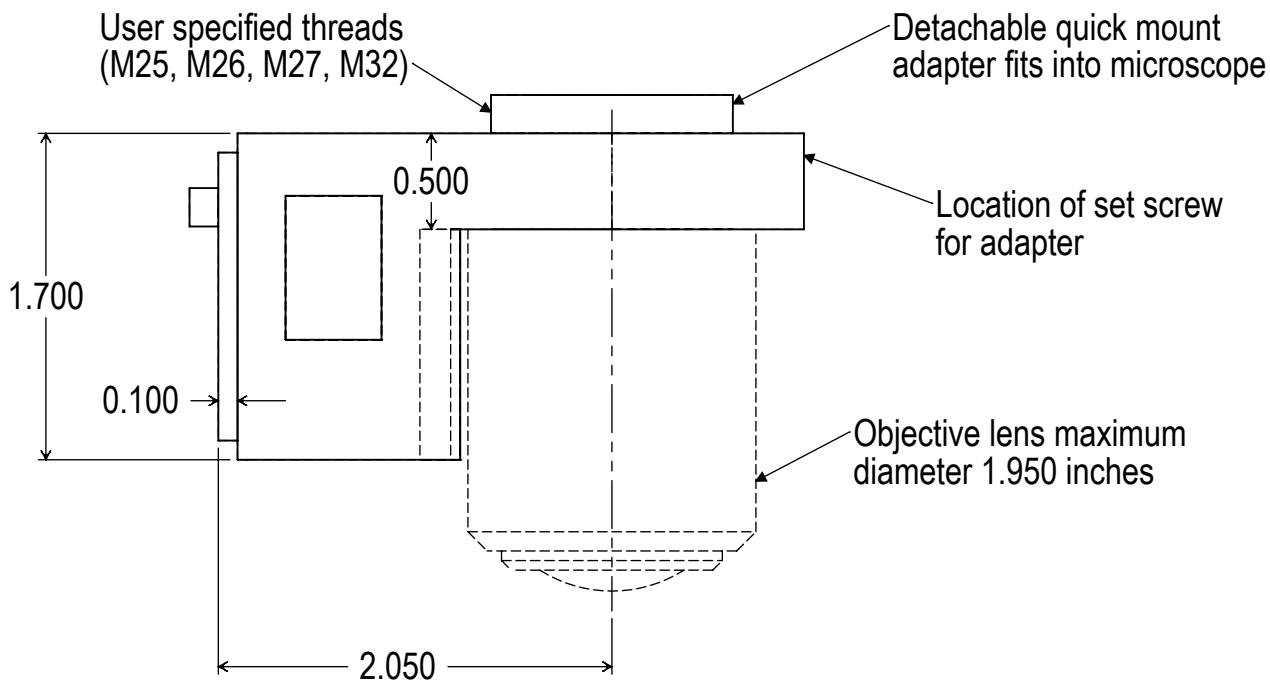

MAD CITY LABS INC.

Nano-F100/200W

Dimensions are in INCHES

Drawing No.
NFx001W.10.A

DRAWING IS TO BE USED AS A GUIDE ONLY. DIMENSIONS ARE SUBJECT TO CHANGE WITHOUT NOTICE. THE INFORMATION CONTAINED IN THIS DRAWING IS THE SOLE PROPERTY OF MAD CITY LABS. ANY REPRODUCTION IN PART OR AS A WHOLE IS PROHIBITED.