REV.	REVISIONS DESCRIPTION	DATE	APPROVED

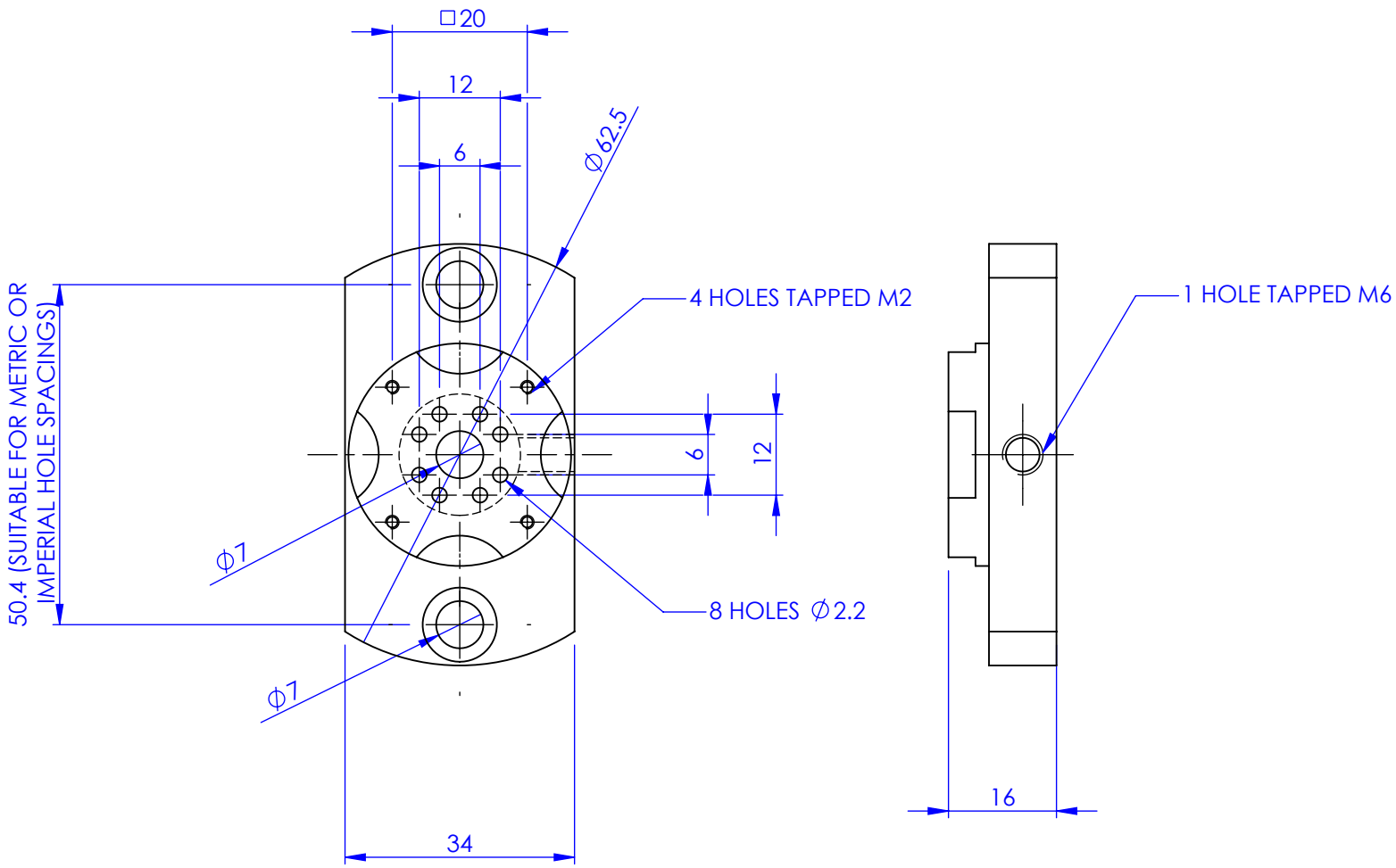

PROPRIETARY AND CONFIDENTIAL
COPYRIGHT ELLIOT SCIENTIFIC Ltd.
THE INFORMATION CONTAINED IN THIS DRAWING IS THE SOLE PROPERTY OF ELLIOT SCIENTIFIC LTD. REPRODUCTION IN PART OR AS A WHOLE WITHOUT WRITTEN PERMISSION IS PROHIBITED.

DIMENSIONS ARE IN mm
GENERAL TOLERANCES: ± 0.1
ANGULAR TOLERANCES: ±
SURFACE FINISH:
ALL BURRS, SHARP EDGES AND CORNERS TO BE REMOVED

	NAME	DATE
AUTHOR	GW	02/06/2010
CHECKED	--	--

MATERIAL

FINISH
--

DO NOT SCALE DRAWING

Elliot Scientific

TITLE
ADAPTOR PLATE

SIZE A4 | DWG. NO. MDE293

SCALE:1:1 | THIRD ANGLE PROJECTION | SHEET 1 OF 1