Elliot Scientific Ltd
Unit 11 Sandridge Park,
Porters Wood,St Albans,
AL3 6PH, United Kingdom
Tel: +44 (0)1582 766300
Fax: +44 (0)1582 766340
www.elliotscientific.com
sales@elliotscientific.com

shop.ozoptics.com
www.ozoptics.com

MEMS VARIABLE OPTICAL ATTENUATORS: SINGLE AND MULTI-CHANNEL

Features:

- Telcordia GR-1209 and GR-1221 qualified
- Small size, low cost
- Available in the following configurations:
  - Single channel discrete VOA
  - 4 & 8 channel VOA arrays
  - Higher port counts up to 40 VOAs per module
- Normally-open or Normally-closed
- Low voltage (6.5 V) or high voltage (18 V)
- Singlemode or PM fiber
- Analog DC voltage control
- Independent continuous attenuation control for each channel
- Fast response
- Low insertion loss
- High dynamic range
- Low WDL, PDL, TDL
- Very low power consumption
- Very low crosstalk
- Stable and repeatable in open loop operation
- High attenuation accuracy
- Best-in-class resistance to shock & vibration

Architecture:

- Uni-axial, uni-directional, MEMS mirror
- Electrostatic comb
- Fully symmetric

Applications:

- Signal power management in optical networks
- Dynamic optical power control and channel equalization in add/drop multiplexers
- Power balancing before modulation and multiplexing
- Active gain equalization in DWDM systems
- Power control into receivers
- Gain tilt control in EDFAs
- Channel balancing for optimizing transmission performance in long-haul and metro networks
- Test equipment

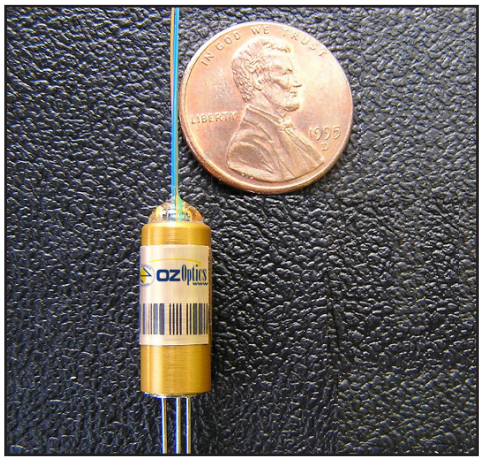

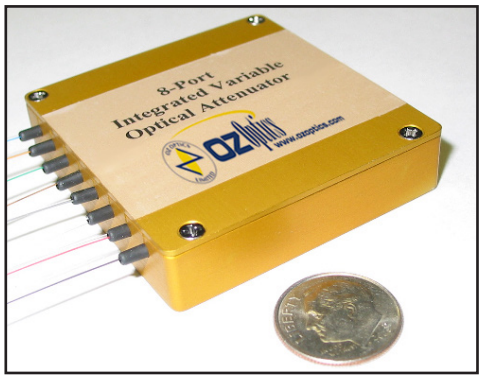

Product Description:

OZ Optics Ltd. offers MEMS-based variable optical attenuator (VOA) in a fast, low cost miniature package. These best-in-class attenuators are available either as single units or as arrays of attenuators in which each VOA has its own independent continuous control. Attenuation is controlled by an analog DC voltage input signal.

OZ Optics Ltd. offers MEMS-based VOAs with either Singlemode or Polarization Maintaining (PM) fibers. Our ingenious manufacturing techniques ensure optimum alignment of PM fibers, allowing high Polarization Extinction Ratios while dramatically minimizing assembly costs.

OZ Optics Ltd. MEMS VOAs are available in any combination of the following parameters: (1) Single VOAs with 0–6.5 volt or 0–18 volt driving power (2) VOA arrays with 5 volt power supply to the module and 0–6.5 volts on each driving pin (3) normally open or normally closed.

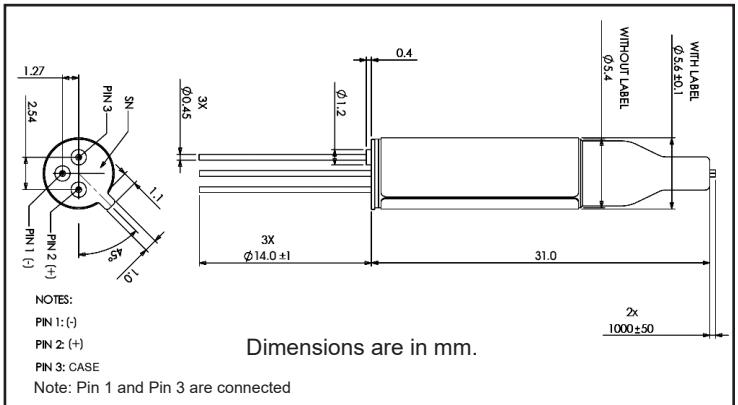

Figure 1: Single MEMS VOA

Pin Definition

Pin NO	Function	Pin NO	Function
1	No Connection	7	VOA5+
2	VOA1+	8	Ground
3	VOA2+	9	VOA6+
4	Ground	10	VOA7+
5	VOA3+	11	Ground
6	VOA4+	12	VOA8+

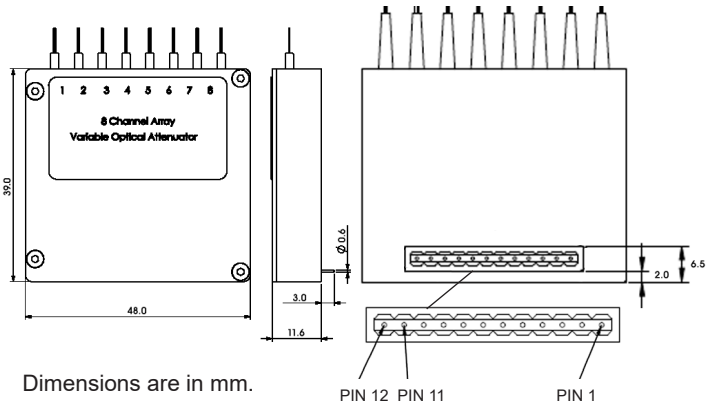

Figure 2: 8-Channel MEMS VOA Array

Standard Product Specifications: for units at telecom wavelengths

Parameter		Single Channel	Multi Channel	Unit
Number of channels		1	4, 8, … 40	
Operating wavelength range [1]		C or L band		
Dynamic attenuation range		Max. 40		dB
Attenuation without power		Normally Closed or Open		
Attenuation resolution		Continuous		
Insertion loss [2]		< 0.8		dB
Return loss [4]		Min. 45		dB
Response time (typical)) [3]	For 6.5 Volt VOA	2.0		msec
Polarization Dependent Loss [4] (PDL)	at 0 dB attenuation at 10 dB attenuation at 20 dB attenuation	0.10 0.30 0.50	0.10 0.30 0.60	dB dB dB
Wavelength Dependent Loss [4] (WDL)	at 0 dB attenuation at 10 dB attenuation at 20 dB attenuation	0.20 0.60 1.50		dB dB dB
Temperature Dependent Loss [4] (TDL)	at 0 dB attenuation at 10 dB attenuation	0.30 1.10		dB dB
Repeatability (after 100 cycles)		0.1		dB
Polarization Mode Dispersion (PMD)		0.05		psec
Ripple [5]		0.2		dB
Maximum optical power		500		mW
Operating temperature range		-5 to +70	-5 to +65	°C
Storage temperature		- 40 to +85		°C
Hermeticity (MEMS only)		$< 10^{-7}$		$atm.cm^3/s$
Electrical Interface		Analog		
Driving voltage [6]		0–6.5V or 0–18		V DC V DC
Power consumption		< 10	$< 10 \times n^2$	mW
Mechanical Dimensions		See Drawing		
Fiber Type		SMF 28e +		
Telcordia spec		GR-1209, GR-1221		

(1) **Wavelengths from 532 to 2000 nm are also available.**
(2) Excluding connectors.
(3) Response time max 5 msec.
(4) For all polarization states, over operating temperature range, measured over operating wavelength range i.e. ITU defined C or L band.
(5) The worst case variation in attenuation (peak to peak) over any 0.4 nm window for all polarization states, over operating temperature and wavelength range.
(6) Maximum DC voltage for full attenuation range.

Ordering Information for Custom Parts:

OZ Optics welcomes the opportunity to provide custom designed products to meet your application needs. As with most manufacturers, customized products take additional effort so please expect some differences in pricing compared to our standard parts list. In particular, we will need additional time to prepare a comprehensive quotation, and lead times may be longer than normal. In most cases non-recurring engineering (NRE) charges, lot charges, and a 50 piece minimum order will be necessary. These points will be carefully explained in your quotation, so that your decision is as well-informed as possible. We strongly recommend buying our standard products.

Questionnaire for Custom Parts:

1. How many fiber channels do you intend to control?
2. What wavelengths are you using?
3. Are you using single mode or polarization maintaining fiber? What core/cladding size?
4. What type of connectors are you using?
5. How long should the fibers be? What size jacketing?
6. Do you need integrated power monitoring?
7. Are there any other special requirements?

MEMS Multichannel VOA

Part Number

MMVOA-*C*-*W*-*F*-*a/b*-*XY* -*JD* -*L*(-M)[1]

C = Number of Channels:
1, 2, 4, 8, 16, 32, or 40

W = Wavelength
Specify in nm 1550 for 1470–1620 nm operating range (C, L, and S bands). Other wavelengths, 780–2000 nm available upon request.

F = Fiber type
S = Singlemode
P = Polarization Maintaining

a/b = Fiber core/cladding size, in microns
9/125 for standard Corning SMF-28 singlemode fiber.
8/125 for 1550 nm PANDA style PM fiber.

L = Fiber length, in meters on each side of the device:
1 meter is standard. If the inputs and outputs are different lengths, then specify the input and output lengths with a comma. Example: To order 1 meter on the input, and 7 meters on the output, enter 1,7 for L in the part number.

JD = Fiber Jacket Size:
0.25 = 250 µ MOD acrylate coating (standard)
1 = 900 µ MOD Hytrel Buffer (optional)

X,Y = Input and Output Connector types
3S = FC connector, Super PC finish
3U = FC connector, Ultra PC finish
3A = FC connector, Angled PC (APC) finish
8 = AT&T-ST connector
SC = SC connector, Super PC finish
SCA = SC connector, Angled PC (APC) finish
LC = LC connector
MU = MU connector
E = E2000 connector
EA = E2000 connector, Angled PC (APC) finish
X = No connector
Note: All fibers on one side are terminated with one connector type.

Note:[1] Add "-NC" for normally closed (Dark VOA) option.

Ordering Examples For Custom Parts:

A customer needs an eight channel, 1550nm Singlemode MEMS VOA. The fibers on each side are 1 meter long, with 900 micron loose tube hytrel jacketing. The ends of the fibers are to be terminated with FC/APC connectors. The part number and description are as follows:

Part Number	Description
MMVOA-8-1550-S-8/125-3A3A-1-1	MEMS Multichannel VOA, with eight channels. Each channel uses SM fiber for 1550 nm, 1 meter long on both ends, 900 micron loose tube hytrel jacketing, with FC/APC connectors on each end.

Frequently Asked Questions (FAQs):

Q: How does the integrated power monitoring work?
A: Integrated power monitoring is achieved through the use of a unique tapping process and a photodiode. The output signal from the photodiode can be measured by a feedback circuit to control the attenuation.

Application Notes:

Application example: Load balancing on a WDM network
As illustrated in figure 2, an eight channel wavelength multiplexed signal from a trunk line is demultiplexed into individual signals. The signals are of different intensities, and have to be balanced to avoid saturating any of the receivers. To do so, each channel is sent through a corresponding port on an eight channel MEMS VOA. The signal strength through the attenuator outputs is monitored by a control circuit. If the output signal on one channel gets too high or too low, the corresponding attenuator is adjusted to bring the light level to the correct range. The complete module is very compact.

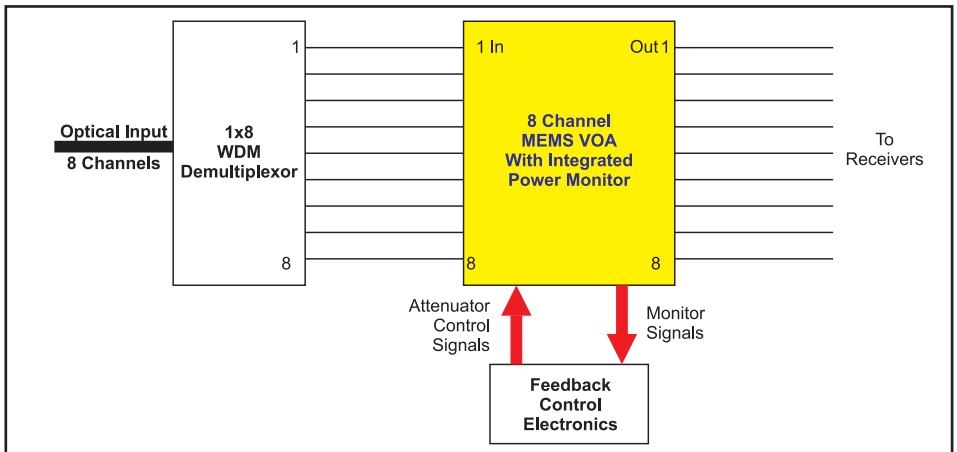

Figure 3: Using A MEMS VOA To Balance Signal Strengths In A WDM Network