Elliot Scientific Ltd
Unit 11 Sandridge Park,
Porters Wood,St Albans,
AL3 6PH, United Kingdom
Tel: +44 (0)1582 766300
Fax: +44 (0)1582 766340
www.elliotscientific.com
sales@elliotscientific.com

shop.ozoptics.com
www.ozoptics.com

Directional Fiber oPtic Power Monit ors (t aPs/Phot oDioDes)

Patent numbers: canada 2,494,133, Usa 7095931, 7295731, china 1672073, and europe 03766088.3, eP1527363

Features:

- Telcordia GR-468 qualified
- Available in versions for any wavelength from 400 nm to 2100 nm
- Low insertion loss, low return loss, and low polarization dependent loss
- High directivity and large dynamic range
- Broadband response
- High power handling
- High extinction ratios for polarization maintaining versions
- TAP technology available for licensing
- Low cost
- Miniaturized package
- Inline integration, maintaining fiber continuity without interruption to the optical path
- Remotely and locally controllable
- USB and RS232 communication options
- Available for standard telecommunication fibers, polarization maintaining fibers, multimode fibers, photonics crystal fibers, and other specialty fibers
- Available with or without an integrated photodiode
- Can be integrated within other optical components using automated processes
- Available in versions for multiple channels

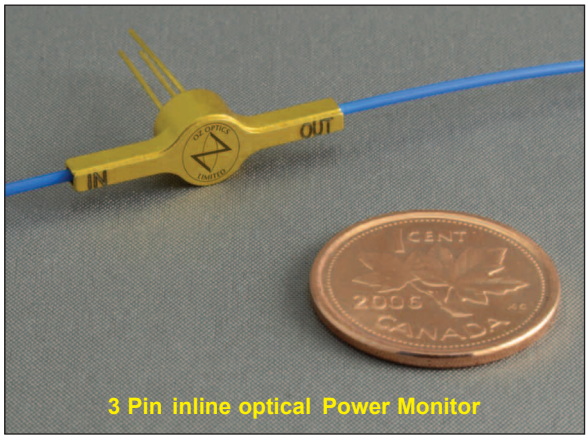

3 Pin inline optical Power Monitor

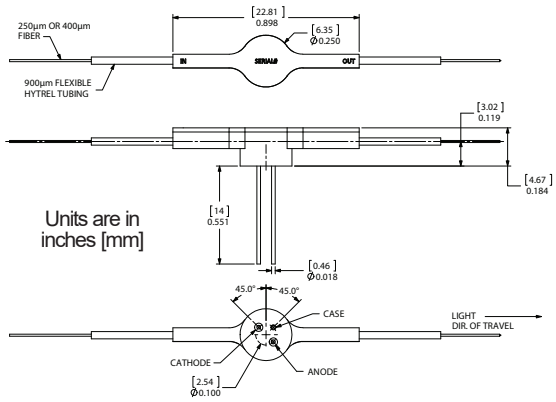

Figure 1. Dimensions of 3 Pin optical Power Monitor

applications:

- Power monitoring
- Optical power control devices
- Channel balancing for Wavelength Division Multiplexing (WDM) systems
- Dynamic optical amplifier gain monitoring
- FTTH Network monitoring
- Real time inline test and measurement
- Fiber optic sensors
- OCT systems

Product Description:

OZ Optics offers a series of inline optical power monitors and tap couplers based on a revolutionary, patented technology. These taps and monitors provide a way to easily measure the signal intensity through an optical fiber in a simple, miniature package, and are ideal for real time monitoring and feedback for optical amplifiers or WDM systems, as well as for fiber optic sensors.

More traditional monitoring systems typically use fused couplers to tap a fixed amount of light into another fiber that guides the optical power to a photodiode. This method is bulky and must be done using discrete components. In contrast, OZ Optics' optical taps direct a controlled amount of light from the fiber core to the cladding surface where it can be directly monitored with high efficiency and very low loss. This inline tapping is accomplished without bending, shaping, or otherwise distorting the fiber. As a result, the tap can be directly incorporated into optical assemblies, without affecting the original functionality.

Taps are directional in nature, with coupled light traveling in one direction through the fiber preferentially reaching the photodiode, instead of light from the reverse direction. This directionality is ideal for monitoring traffic independently of signals travelling back through a network link. If desired, bi-directional versions are also available and can be provided on request.

Taps can be fabricated into standard singlemode fibers (SMF), polarization maintaining fibers (PMF), multimode fibers (MMF), photonic crystal fibers (PCF), and other specialty fibers, for any design wavelength and with different tap ratios available upon request. Please note that for multimode fibers the tap ratio is somewhat modal dependent, and is optimized either for equilibrium mode distribution conditions or fully filled modal excitation. Tap directionality and range of possible tap ratios are also

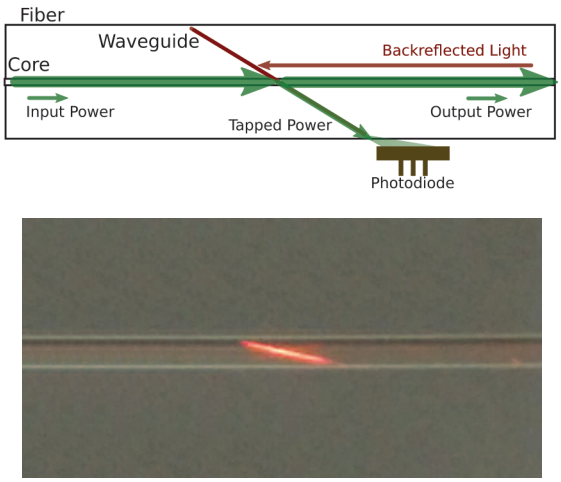

Figure 2. optical t ap

constrained by the desired multimode fiber core/cladding size, but can be optimized for a specific fiber and application.

Optical power monitors combine the optical tap design with a photodiode in an integrated package and are available in different configurations with Si and InGaAs detectors for different wavelength ranges. The device produces a current proportional to the optical power within the fiber and the small size and simple interface makes it very easy to design into optical hardware. Multiple channel power monitors for WDM applications are available upon request.

Taps can be directly integrated onto fiber pigtail assemblies and packaged inside devices that rely on optical feedback. For instance, laser diodes can be built with inline optical taps directly inside the package to monitor the output signal intensity. This provides a more precise means of monitoring optical power, as signals measured by the directional tap are not influenced by return losses like in conventional laser diode modules. The small form factor allows the main device and the monitor to be packaged into a single housing, reducing both size and costs.

OZ Optics is licensing this unique technology to passive and active optical component manufacturers and providing the equipment, training and service for incorporating inline taps into new and existing products. Applications include laser diodes, modulators, attenuators, MEMS systems, and others. The unit cost of each optical tap/power monitor can be considerably reduced, depending on the manufacturing volume. The process can also be used to produce inline attenuators, to precisely control the output power from a device or subsystem. Contact OZ Optics for additional information and licensing terms.

inline optical taps possess several key advantages over the standard technique of using a fused coupler with a photodiode for power monitoring. these include:

size: Fused splitters are typically at least 30 mm long, with additional tens of centimeters of fiber needed on the output arms for attaching the splitter to devices and to photodiodes. In contrast, inline taps can be made within a package less than a centimeter in length.

consolidation: Inline taps combine the functions of a fused splitter and a photodiode into one package.

integration: Unlike fused coupler systems, inline taps can be built within a device at the component level, thus simplifying overall system designs.

automation: Inline optical taps can be made in a single automated process. In contrast, adding fused splitters with photodiodes require several discrete processes, with some manual operations necessary.

Flexibility: Inline optical taps can be made with tap ratios as small as 0.05%, allowing one to manufacture optical taps for very high power applications.

Multichannel friendly: Multichannel inline optical taps are manufactured in a small, easy to use package. In contrast, assembling multichannel monitors with fused splitters makes a cumbersome package with many fibers to arrange.

standard Product specifications: Telcordia GR-468 qualification results can be found at www.ozoptics.com/ALLNEW_PDF/TRE0006.pdf

Optical Power Monitor for 1450 nm to 1650 nm with InGaAs Photodetector

Tap Ratio[1] (%)	0.5 ± 0.3	1.0 ± 0.5	2.0 ± 0.5	4.0 ± 0.5	
Responsivity (mA/W)	5 ± 3	10 ± 5	20 ± 5	41 ± 5	
Tap Efficiency[2]	> 0.65 (typical 0.75 and up to 0.85)				
Insertion Loss (dB)	< 0.05	< 0.1	< 0.2	< 0.3	
Return Loss (dB)	> 70 dB				Excluding connectors
Directionality (dB)	> 20				From 1530 nm to 1565 nm @ RT
Wavelength Dependent Response (dB)	< 0.25				From 1530 nm to 1565 nm @ RT
Temperature Dependent Response (dB)	< 0.25				From -5 °C to 75 °C @ 1550 nm
Power Handling (mW) at 5V reverse voltage	2000	1000	500	250	Under reverse bias and with proper cooling and heat sinking. Higher power handling can be provided with lower tap ratio.
Typical Frequency Response (3 dB Roll off, with R_L = 50Ω)	80 MHz @ 0V reverse voltage				

Polarization Characteristics

Fiber Type	SM fiber (Corning SMF-28[3])	PM fiber (Corning 1550 nm PANDA[3])	
Polarization Dependent Loss (dB)	< 0.1	N/A	From -5 °C to 75 °C and from 1530 nm to 1565 nm
Polarization Dependent Response (dB)	< 0.2 (< 0.3 for tap ratios below 0.5%)	N/A	From 1530 nm to 1565 nm @ RT
Polarization Extinction Ratio (dB)	N/A	> 20 (> 25 and > 30 available upon request)	

Photodiode Properties

Detector Type	Si	InGaAs	Extended InGaAs
Wavelength Range	320 nm to 1060 nm	900 nm to 1700 nm	1600 nm to 2100 nm[4]
Dark Current	1 nA at 5V reverse voltage	1 nA at 5V reverse voltage	20 nA at 0.5V reverse voltage
Maximum Reverse Voltage	20V	20V	1V

Environmental Properties

Operating Temperature	0 °C to 70 °C	-5 °C to 85 °C	-40 °C to 85 °C
Storage Temperature	-40 °C to 85 °C		
Relative Humidity	< 85% RH noncondensing at 85 °C		
Weight	4 g		

[1] Other tap ratios and tighter tolerances available upon request.
[2] Defined as the ratio between the power measured at the detector and power attenuated by the optical tap. This includes intrinsic scattering and reflection losses.
[3] Other fibers including specialty fibers are available upon request.
[4] Spectral characteristics in figure 3.

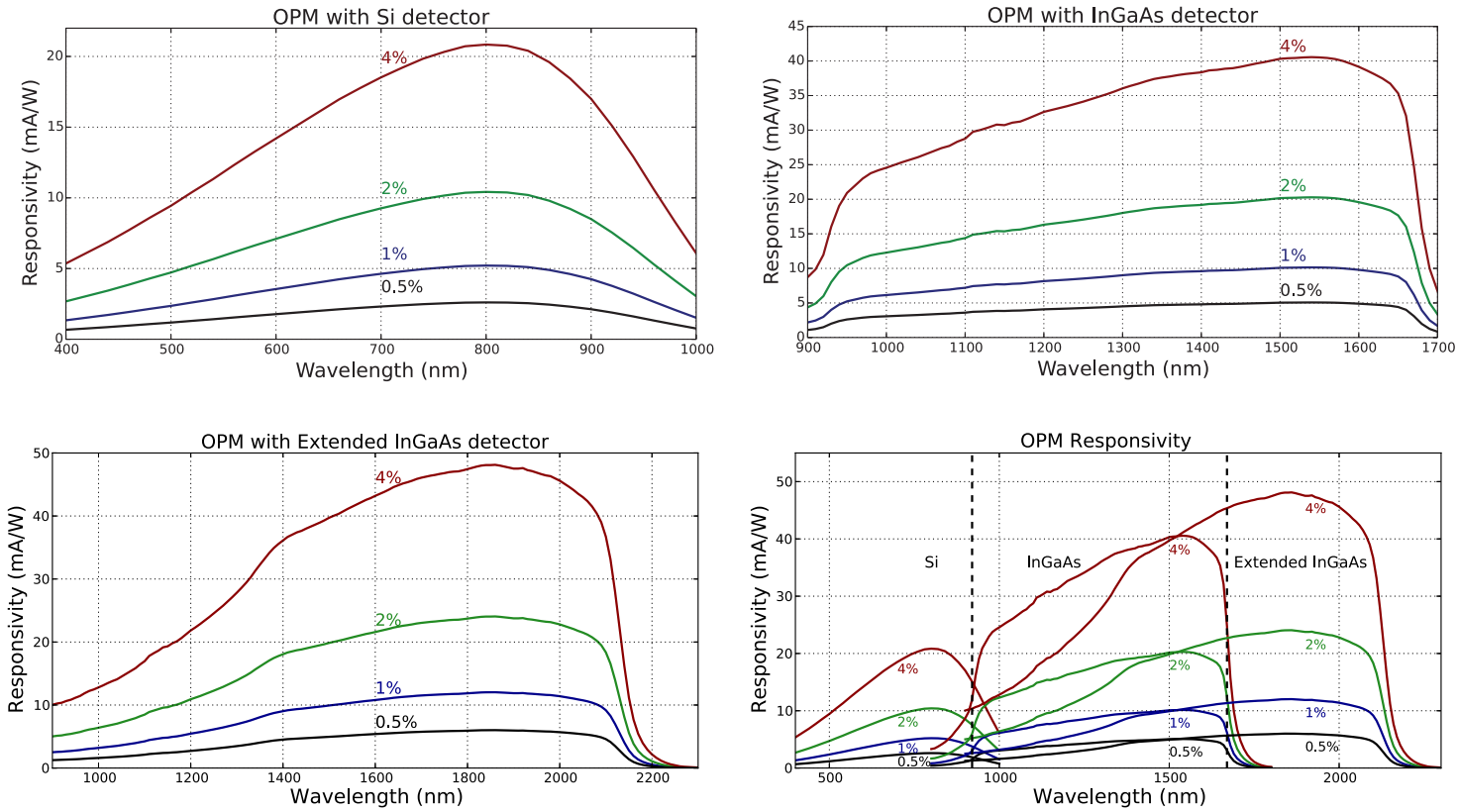

Figure 3. r esponsivity of o PMs with s tandard t ap r atios for Different w avelengths

o rdering e xamples for s tandard Parts:

Bar Code	Part Number	Description
37368	OPM-11-1550-9/125-S-XX-1-1-1-INGAAS-TO18	Single channel SM optical power monitor for 1550 nm wavelength with a 1±0.5% tap ratio using an InGaAs detector in a 3 pin TO18 can. The fiber on either side of the monitor is 1 m long and 0.9 mm loose tube jacketed with no connectors.
39848	OPM-11-1550-8/125-P-XX-1-1-1-INGAAS-TO18	Single channel PM optical power monitor for 1550 nm wavelength with a 1±0.5% tap ratio using an InGaAs detector in a 3 pin TO18 can. The fiber on either side of the monitor is 1 m long and 0.9 mm loose tube jacketed with no connectors.
42496	OPM-11-1550-8/125-P-3A3A-1-1-1-INGAAS-TO18	Single channel PM optical power monitor for 1550 nm wavelength with a 1±0.5% tap ratio using an InGaAs detector in a 3 pin TO18 can. The fiber on either side of the monitor is 1 m long, 0.9 mm loose tube jacketed and terminated with angle FC/APC connectors.

o rdering information for c ustom Parts:

OZ Optics welcomes the opportunity to provide custom designed products to meet your application needs. As with most manufacturers, customized products do take additional effort so please expect some differences in the pricing compared to our standard parts list. In particular, we will need additional time to prepare a comprehensive quotation, and lead times will be longer than normal. In most cases non-recurring engineering (NRE) charges, lot charges, and a 25 piece minimum order will be necessary. These points will be carefully explained in your quotation, so your decision will be as well-informed as possible. We strongly recommend buying our standard products.

Questionnaire for c ustom Parts:

1. What is your operating wavelength range?
2. Are you using standard singlemode, polarization maintaining, or a speciality fiber? What type?
3. What is the expected optical power through the fiber?
4. Do you need a single channel, or multiple channel device?
5. What sort of tap ratio do you require?
6. Do you need a detector? What type?
7. Do you need the ends of the fiber connectorized? What type of connector do you need?
8. How long should each end of the fiber be?
9. Do you need the fiber cabled? What cable size do you need?

Description

single or Multi-channel inline optical Power Monitor

Part number

oPM-1 *N-W-a/b-F-XY-JD-L-TR-DET*

N = Number of fibers (1 channel is standard)

W = Wavelength in nm:
1550 for 1450 to 1650 nm operating range
1300 for 1280 to 1440 nm operating range
Enter value for any other wavelength from 400 to 2100 nm operating range

a/b = Fiber core/cladding sizes, in micrometers:
3.5/125 for 488 nm PMF
4/125 for 633 nm PMF
5/125 for 780/850 nm SMF/PMF
6/125 for 980/1060 nm PMF/SMF
9/125 for 1300 or 1550 nm SMF
7/125 for 1300 nm PMF
8/125 for 1550 nm PMF
See Tables 1 to 5 of the OZ Optics *Standard Tables* for other fiber sizes
http://www.ozoptics.com/ALLNEW_PDF/DTS0079.pdf

F = Fiber type: S = Singlemode
P = Polarization maintaining
M = Multimode*

* Optimized either for equilibrium mode distribution conditions or fully filled modal excitation.

DET = Detector type:
INGAAS-TO18 for an InGaAs detector (980 to 2100 nm wavelengths)
SI-TO18 for a Silicon detector (400 to 1000 nm wavelengths)
X for a bare tap only, no detector or housing

TR = Tap ratio, in percent (0.5/1/2/4/etc.)

L = Fiber length, in meters, on each side of the device

JD = Fiber jacket type:
0.25 = 250 micron acrylate coating
0.4 = 400 micron acrylate coating
1= 900 micron OD hytrel jacket

XY = Input and output connector codes
3S = Super NTT-FC/PC
3U = Ultra NTT-FC/PC
3A = Angled NTT-FC/PC
SCU = Ultra SC
SCA = Angled SC
LC = LC
X = No Connector

ordering examples for custom Parts:

A PM power monitor is required with an operating wavelength of 1520 to 1570 nm. The standard 1% tap ratio with a PIN InGaAs detector is sufficient for the application. The input end will be unterminated, while the output end will have an FC/APC connector. 0.9 mm OD loose tube cabling is required. Fiber length for all fibers will be 0.5 m on each side.

Example:

Part Number	Description
OPM-11-1550-8/125-P-X3A-1-0.5-1-INGAAS-TO18	PM optical power monitor for 1550 nm wavelength with a 1% tap ratio using an InGaAs detector. The fiber on either side of the monitor is 0.5 meter long, 0.9 mm jacketed, with no connector on the input side, and with FC/APC connector on the output side.

application notes:

Unidirectional versus bi-Directional taps and Power Monitors: Because of the directional nature of standard optical taps and monitors, one normally will measure light traveling in one direction through the fiber, but not in the reverse direction. This directionality is ideal for monitoring traffic. For example, by using two optical taps in opposing directions, one can simultaneously measure output power and return losses through a system.

In some cases one may prefer having a bi-directional tap or monitor. Such devices can be produced on request. These devices are essentially two optical taps back to back, designed so that the tapped light is incident at one point along the fiber.

application examples:

example #1: optical power stabilization of an optical amplifier

The output signal from an optical amplifier is affected by several factors, including pump energy polarization dependent losses or gain, and the signal intensity of the source. By using an optical power monitor together with a variable attenuator, one can control the signal intensity to ensure that the optical output power remains constant.

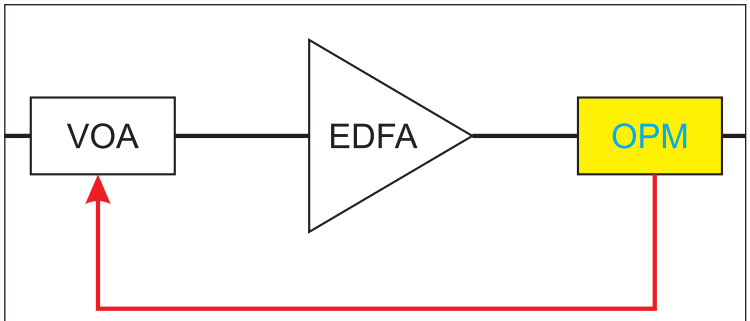

Figure 4. optical Power stabilization of an optical amplifier

application examples: *(continued)*

example #2: laser diode with integrated power monitor

Laser diodes can be built with inline optical taps directly inside the package to monitor the output signal intensity. This provides a more precise means of monitoring the signal intensity, as signal seen by the directional tap is not influenced by return losses from the fiber output, which otherwise would be seen in conventional laser diode modules.

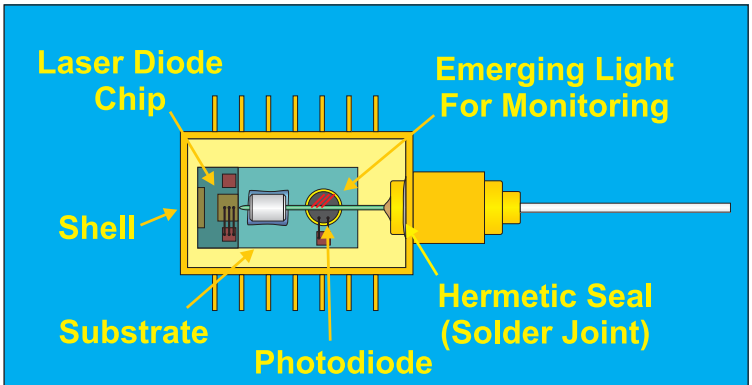

Figure 5. laser Diode with integrated Power Monitor

example #3: Using smart patchcords to monitor a Ftth network

These days fibers are being employed in fiber to the home (FTTH) networks. Such networks may use a single wavelength source, or multiplex several wavelengths, such as 1310 nm, 1480 nm and 1550 nm, to transmit data. Each network may have several dozen nodes on it. Often the optical signal strength through these networks must be measured at each node, to monitor signal quality and troubleshoot connection problems. However, problems may occur while the repair technician is checking the signals.

Typically to measure the optical strength at a node, the technician has to break the connection, shutting down the node. He then has to measure the relative signal strengths. If there are multiple wavelengths going through the same node, then he needs to use an optical spectrum analyzer (OSA) or wavemeter, which is costly. Finally, there is a risk of contaminating the fiber ends while disconnecting or reconnecting the node to the network. This can lead to problems later on, and possible costly repairs. Therefore these measurements can be quite costly.

In contrast, smart patchcords can be built onto the fiber of each node and installed at a convenient location, such as a patch panel. The smart patchcords tap about 1% of the light out and can be designed to receive light only for a specific wavelength. Thus three units could be used to three separate wavelengths at each node, without interrupting transmission. Smart patchcords can be provided with optional electronics and RS232 or USB connections, allowing the technician to simply connect the unit to a laptop or PDA to record and log the measurements effortlessly. Alternatively the smart patchcords could transmit their measurements on a regular basis to a remote monitoring station. Depending on the options selected, smart patchcords could be installed on every node of a network for a few tens of dollars each.

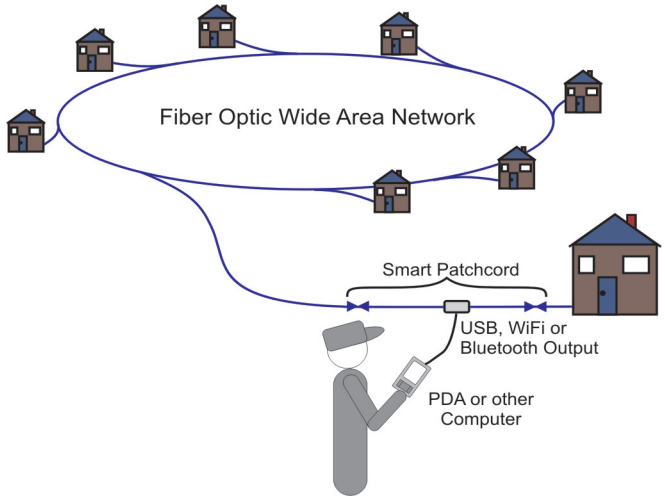

Figure 6. t esting networks with smart Patchcords installed

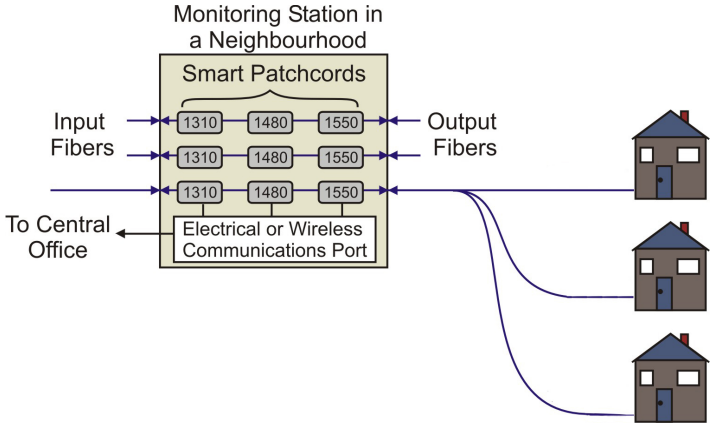

Figure 7. remote Monitoring a wDM network

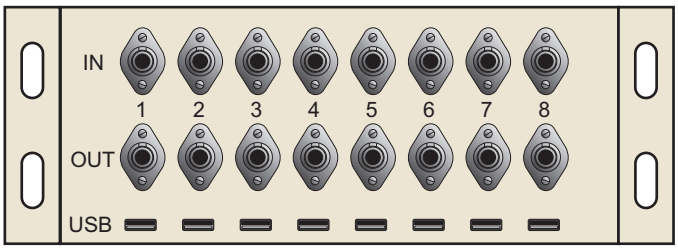

Figure 8. smart Patchcord Patch Panel for Monitoring a network